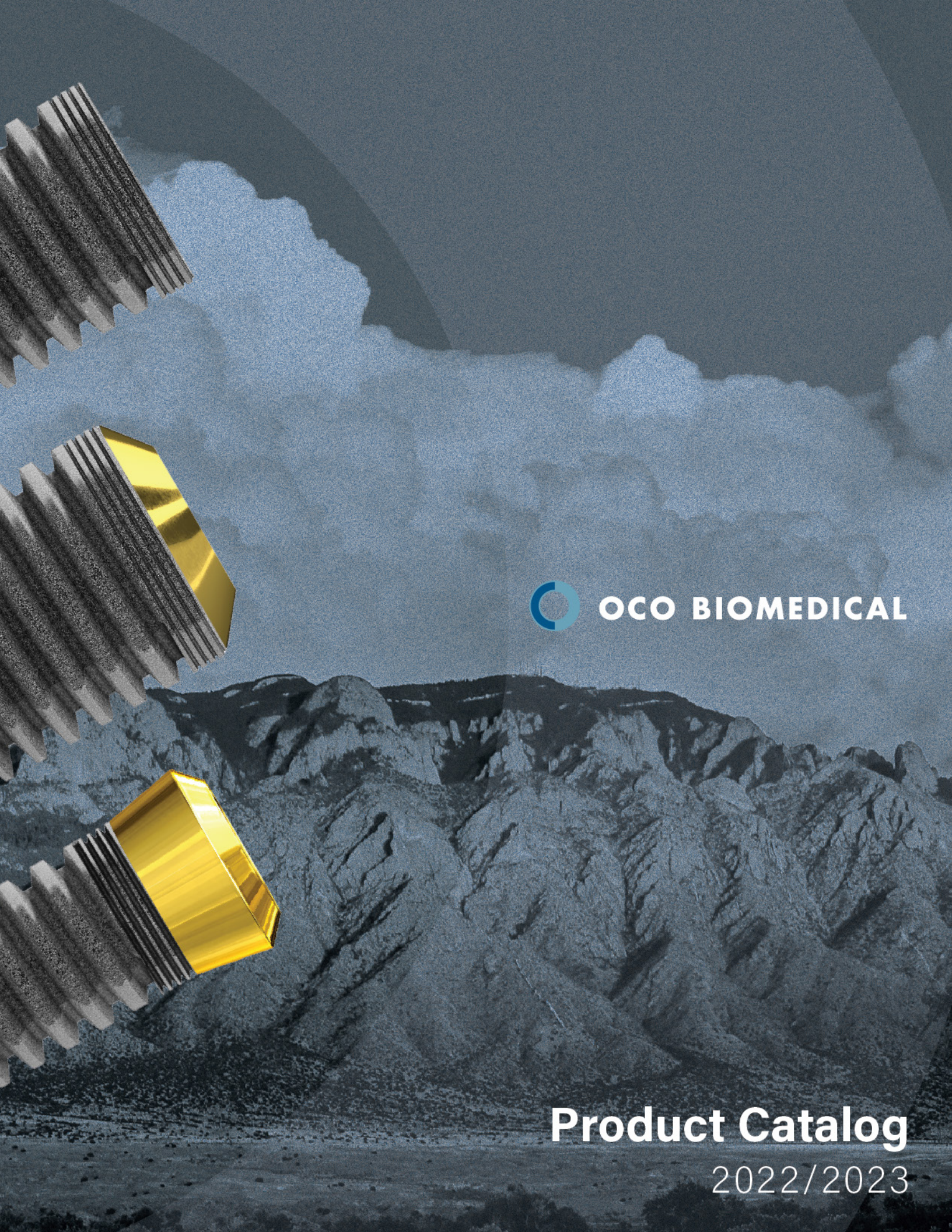

OCO BIOMEDICAL

Product Catalog

2022/2023

Table of Contents

Complete Implant Surgical System	1
Engage™ Surgical System	2
Guided Surgical System	3
DD-Sinus Lift™ Kit	4
SDI Surgical System	5
Final Osteotomy Former Drill Stop Kit	5
SDI Implants	6
3.0 Implants	7
ISI Implants	8
TSI Implants	9
ERI Implants	10
Engage™ Implants	11
SDI Prosthetics	12
3.0 Prosthetics	12 - 13
ISI Prosthetics	13
TSI & ERI Prosthetics	14 - 16
Engage™ Prosthetics	17 - 21
Instrumentation	22 - 26
Regenerative Products	27
Restorative Products	28
Patient Education Tools	29
Aseptico Implant Unit & Handpiece Packages	30
Aseptico Handpieces	31
Aseptico Accessory Products	31
Terms & Conditions	32

Complete Implant Surgical System

Places All OCO Biomedical Implants

Complete Implant Surgical System

The Complete Implant Surgical System is organized with a color-coded system that follows the implant placement procedures in an intuitive format. The system will place and restore the SDI, 3.0, ISI, TSI, ERI, and Engage™ OCO Biomedical Implants.

Product Name	Part #
Complete Implant Surgical System	COMPLETE SURGICAL KIT

Engage™ Compact Kit

Places OCO Biomedical Engage™ Implants

Engage™ Compact Kit

The OCO Biomedical Engage™ compact kit is organized with the OCO color-coded system that follows the implant placement in an easy to follow step by step format.

Product Name	Part #
Engage™ Compact Kit	ENGAGE COMPACT KIT

Torque Wrench (30-90 Ncm)*

Product Name	Part #
Torque Wrench (30-90 Ncm)	6101

*Sold Seperately from Engage™ Compact Kit

Guided Surgical System

Precision, Predictability, & Performance

Guided Surgical System

The guided surgical system is to be used with 3.25, 4.0, & 5.0mm implant diameters.

Product Name	Part #
Guided Surgical System	GUIDED SURGERY KIT

Guided Surgical Sleeve*

Product Name	Part #
1.8mm Guided Surgical Sleeve	1.8 GSS
3.25mm Guided Surgical Sleeve	3.25 GSS
4.0mm Guided Surgical Sleeve	4.0 GSS
5.0mm Guided Surgical Sleeve	5.0 GSS

*Surgical Sleeves for surgical guide fabrication. To be used with the OCO Biomedical Guided Surgery System.

ORDER TODAY: 800-228-0477

WWW.OCOBIOMEDICAL.COM

DD-Sinus Lift™ Kit

DD-Sinus Lift Kit™

The OCO Biomedical DD-Sinus Lift™ System contains all of the instrumentation needed to perform a sinus lift procedure using a crestal approach. The DD-Sinus Life™ technique is unique in that it allows for permeation of the alveolar blood supply from the osteotomy into the sinus cavity for enhanced healing and formation of new bone.

Product Name	Part #
DD-Sinus Lift™ Kit	SINUS LIFT KIT

SDI Surgical System

Places OCO Biomedical SDI Implants (2.2, 2.5, 2.9, & 3.0)

The SDI Surgical system is an economical kit designed specifically for our 2.2, 2.5, 2.9, & 3.0 SDI Implants.

Product Name	Part #
SDI Implant Surgical System	SDI SURGICAL KIT

Final Osteotomy Former Drill Stop Kit

The drill stop kit gives you the vertical control you desire

The Final Osteotomy Former Drill Kit gives you the vertical control and safety you desire for each case. When a drill stop is used, it will prevent over-drilling and ensure that you have gone to the full depth of the desired osteotomy. These stops can be used when placing all styles of OCO Biomedical Implants.

Product Name	Part #
Final Osteotomy Former Drill Stop Kit	DS KIT

SDI

Small Diameter Implant

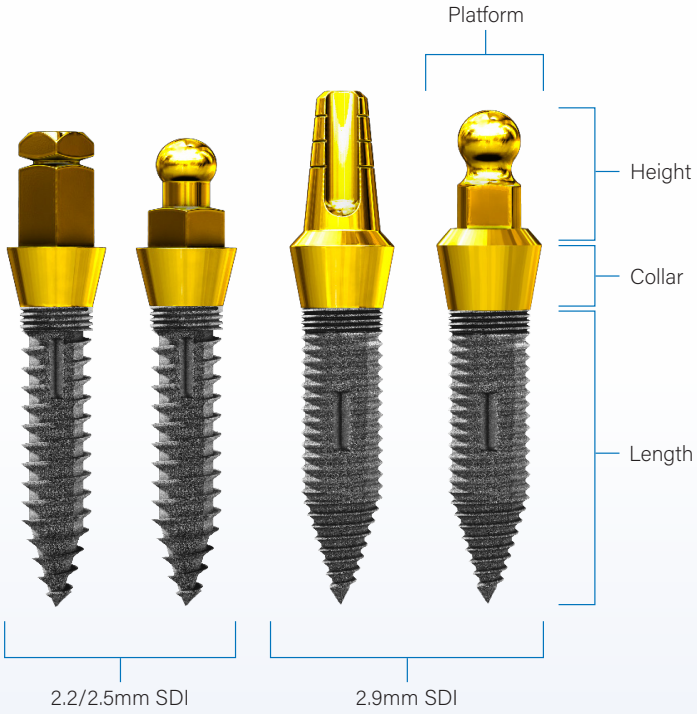

Diameter	Length	Collar	Platform	Height
2.2mm*	10, 12, 14, 16mm	2mm	3.0mm	OB - 3.8mm CB - 4.5mm
2.5mm*	10, 12, 14, 16mm	2mm	3.0mm	OB - 3.8mm CB - 4.5mm
2.9mm*	8, 10, 12, 14, 16mm	2mm	3.7mm	OB - 3.8mm CB - 5.5mm

*2.2/2.5/2.9mm O-Ball is 1.8mm & uses 002 O-Ring/002 Encapsulator

2.2mm SDI Crown & Bridge Implant*

Product Name	Part #
2.2mm x 10mm	SDI 2210 CB
2.2mm x 12mm	SDI 2212 CB
2.2mm x 14mm	SDI 2214 CB
2.2mm x 16mm	SDI 2216 CB

2.2mm SDI O-Ball Implant*

Product Name	Part #
2.2mm x 10mm	SDI 2210 OB
2.2mm x 12mm	SDI 2212 OB
2.2mm x 14mm	SDI 2214 OB
2.2mm x 16mm	SDI 2216 OB

2.5mm SDI Crown & Bridge Implant*

Product Name	Part #
2.5mm x 10mm	SDI 2510 CB
2.5mm x 12mm	SDI 2512 CB
2.5mm x 14mm	SDI 2514 CB
2.5mm x 16mm	SDI 2516 CB

2.5mm SDI O-Ball Implant*

Product Name	Part #
2.5mm x 10mm	SDI 2510 OB
2.5mm x 12mm	SDI 2512 OB
2.5mm x 14mm	SDI 2514 OB
2.5mm x 16mm	SDI 2516 OB

2.9mm SDI Crown & Bridge Implant*

Product Name	Part #
2.9mm x 8mm	SDI 2908 CB
2.9mm x 10mm	SDI 2910 CB
2.9mm x 12mm	SDI 2912 CB
2.9mm x 14mm	SDI 2914 CB
2.9mm x 16mm	SDI 2916 CB

2.9mm SDI O-Ball Implant*

Product Name	Part #
2.9mm x 8mm	SDI 2908 OB
2.9mm x 10mm	SDI 2910 OB
2.9mm x 12mm	SDI 2912 OB
2.9mm x 14mm	SDI 2914 OB
2.9mm x 16mm	SDI 2916 OB

SDI Crown & Bridge implant includes the following:
(1) Analog, (1) TRIP (Tissue Retraction Impression Pickup), (2) Acrylic Copings

SDI O-Ball implant includes the following:
(1) Analog, (1) Encapsulator, (1 each) Red/Black/White O-Ring

3.0

Immediate Stablizing Implant

3.0mm Crown & Bridge Implant*

Product Name	Part #
3.0mm x 8mm	3008 CB
3.0mm x 10mm	3010 CB
3.0mm x 12mm	3012 CB
3.0mm x 14mm	3014 CB
3.0mm x 16mm	3016 CB

3.0mm O-Ball Implant*

Product Name	Part #
3.0mm x 8mm	3008 OB
3.0mm x 10mm	3010 OB
3.0mm x 12mm	3012 OB
3.0mm x 14mm	3014 OB
3.0mm x 16mm	3016 OB

3.0 Crown & Bridge implant includes the following:
(1) Analog, (1) TRIP (Tissue Retraction Impression Pickup), (2) Acrylic Copings

3.0 O-Ball implant includes the following:
(1) Analog, (1) Encapsulator, (1 each) Red/Black/White O-Ring

Diameter	Length	Collar	Platform	Height
3.0mm	8, 10, 12, 14, 16mm	2mm	3.7mm	OB - 4.5mm CB - 5.5mm

ORDER TODAY: 800-228-0477

WWW.OCOBIOMEDICAL.COM

ISI

Immediate Stabilizing Implant

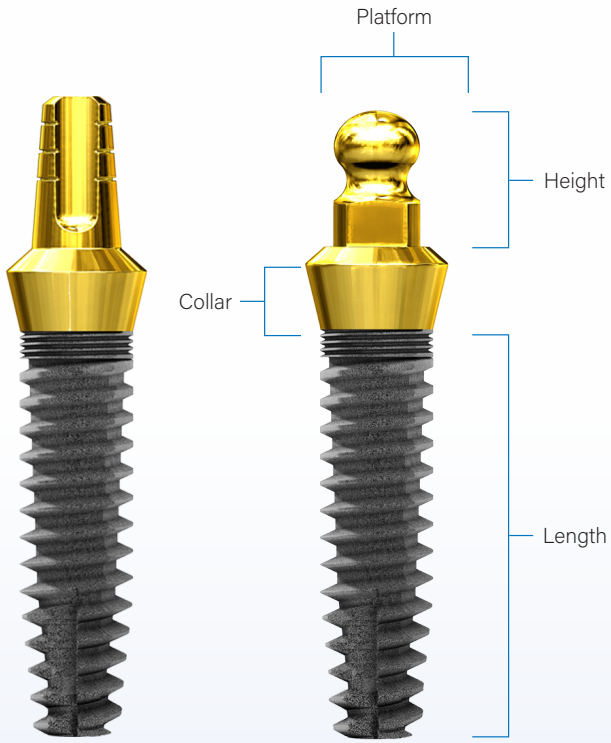

Diameter	Length	Collar	Platform	Height
3.25mm	8, 10, 12, 14, 16mm	2mm	3.7mm	OB - 4.5mm CB - 5.5mm
4.0mm	8, 10, 12, 14, 16mm	2mm	4.7mm	OB - 5.0mm CB - 5.5mm
5.0mm	8, 10, 12, 14, 16mm	2mm	5.7mm	OB - 5.0mm CB - 5.5mm

3.25mm ISI Crown & Bridge Implant*

Product Name	Part #
3.25mm x 8mm	ISI 32508 CB
3.25mm x 10mm	ISI 32510 CB
3.25mm x 12mm	ISI 32512 CB
3.25mm x 14mm	ISI 32514 CB
3.25mm x 16mm	ISI 32516 CB

3.25mm ISI O-Ball Implant*

Product Name	Part #
3.25mm x 8mm	ISI 32508 OB
3.25mm x 10mm	ISI 32510 OB
3.25mm x 12mm	ISI 32512 OB
3.25mm x 14mm	ISI 32514 OB
3.25mm x 16mm	ISI 32516 OB

4.0mm ISI Crown & Bridge Implant*

Product Name	Part #
4.0mm x 8mm	ISI 4008 CB
4.0mm x 10mm	ISI 4010 CB
4.0mm x 12mm	ISI 4012 CB
4.0mm x 14mm	ISI 4014 CB
4.0mm x 16mm	ISI 4016 CB

4.0mm ISI O-Ball Implant*

Product Name	Part #
4.0mm x 8mm	ISI 4008 OB
4.0mm x 10mm	ISI 4010 OB
4.0mm x 12mm	ISI 4012 OB
4.0mm x 14mm	ISI 4014 OB
4.0mm x 16mm	ISI 4016 OB

5.0mm ISI Crown & Bridge Implant*

Product Name	Part #
5.0mm x 8mm	ISI 5008 CB
5.0mm x 10mm	ISI 5010 CB
5.0mm x 12mm	ISI 5012 CB
5.0mm x 14mm	ISI 5014 CB
5.0mm x 16mm	ISI 5016 CB

5.0mm ISI O-Ball Implant*

Product Name	Part #
5.0mm x 8mm	ISI 5008 OB
5.0mm x 10mm	ISI 5010 OB
5.0mm x 12mm	ISI 5012 OB
5.0mm x 14mm	ISI 5014 OB
5.0mm x 16mm	ISI 5016 OB

ISI Crown & Bridge implant includes the following:
(1) Analog, (1) TRIP (Tissue Retraction Impression Pickup), (2) Acrylic Copings

ISI O-Ball implant includes the following:
(1) Analog, (1) Encapsulator, (1 each) Red/Black/White O-Ring

TSI

Two-Stage Implant

3.25mm TSI Two-Stage Implant*

Product Name	Part #
3.25mm x 8mm*	32508 TSI
3.25mm x 10mm*	32510 TSI
3.25mm x 12mm*	32512 TSI
3.25mm x 14mm*	32514 TSI
3.25mm x 16mm*	32516 TSI

*1mm height healing screw included in TSI implant packaging

4.0mm TSI Two-Stage Implant*

Product Name	Part #
4.0mm x 8mm*	4008 TSI
4.0mm x 10mm*	4010 TSI
4.0mm x 12mm*	4012 TSI
4.0mm x 14mm*	4014 TSI
4.0mm x 16mm*	4016 TSI

*1mm height healing screw included in TSI implant packaging

5.0mm TSI Two-Stage Implant*

Product Name	Part #
5.0mm x 8mm*	5008 TSI
5.0mm x 10mm*	5010 TSI
5.0mm x 12mm*	5012 TSI
5.0mm x 14mm*	5014 TSI
5.0mm x 16mm*	5016 TSI

*1mm height healing screw included in TSI implant packaging

TSI implant includes the following:
(1) Analog, (1) Impression Coping w/Fixation Screw, (1) Ball Screw

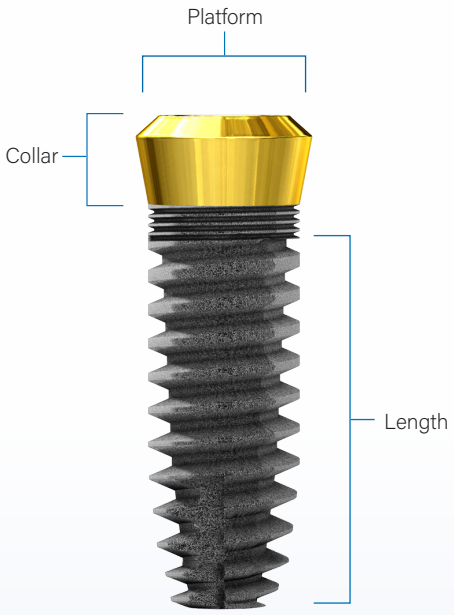

Diameter	Length	Collar	Platform
3.25mm	8, 10, 12, 14, 16mm	2mm	3.7mm
4.0mm	8, 10, 12, 14, 16mm	2mm	4.7mm
5.0mm	8, 10, 12, 14, 16mm	2mm	5.7mm

All TSI implants have the Internal Hex Connection.

ERI

Esthetic Region Implant

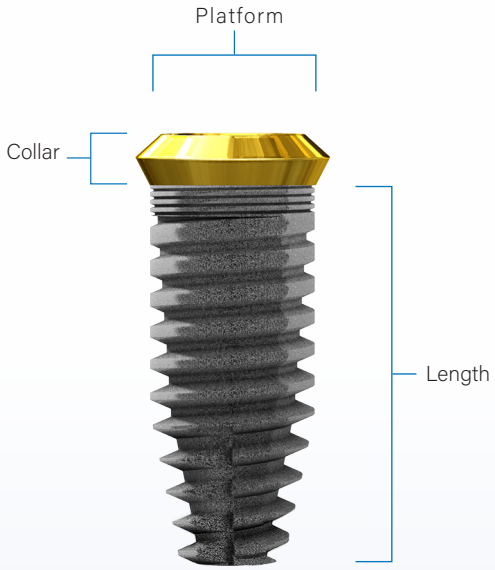

Diameter	Length	Collar	Platform
3.25mm	8, 10, 12, 14, 16mm	1mm	3.7mm
4.0mm	8, 10, 12, 14, 16mm	1mm	4.7mm
5.0mm	8, 10, 12, 14, 16mm	1mm	5.7mm

All ERI Implants have the Internal Hex Connection.

3.25mm ERI Two-Stage Implant*

Product Name	Part #
3.25mm x 8mm*	32508 ERI
3.25mm x 10mm*	32510 ERI
3.25mm x 12mm*	32512 ERI
3.25mm x 14mm*	32514 ERI
3.25mm x 16mm*	32516 ERI

*1mm height healing screw included in ERI implant packaging

4.0mm ERI Two-Stage Implant

Product Name	Part #
4.0mm x 8mm*	4008 ERI
4.0mm x 10mm*	4010 ERI
4.0mm x 12mm*	4012 ERI
4.0mm x 14mm*	4014 ERI
4.0mm x 16mm*	4016 ERI

*1mm height healing screw included in ERI implant packaging

5.0mm ERI Two-Stage Implant*

Product Name	Part #
5.0mm x 8mm*	5008 ERI
5.0mm x 10mm*	5010 ERI
5.0mm x 12mm*	5012 ERI
5.0mm x 14mm*	5014 ERI
5.0mm x 16mm*	5016 ERI

*1mm height healing screw included in ERI implant packaging

ERI implant includes the following:
(1) Analog, (1) Impression Coping w/Fixation Screw, (1) Ball Screw

Engage ™ / Engage™ Plus

Bone Level Implant / Platform Switching Profile

3.25mm Engage™ / Engage™ Plus

Product Name	Part #
3.25mm x 8mm*	32508 ENGAGE
3.25mm x 10mm*	32510 ENGAGE
3.25mm x 12mm*	32512 ENGAGE
3.25mm x 14mm*	32514 ENGAGE
3.25mm x 16mm*	32516 ENGAGE

4.0mm Engage™ / Engage™ Plus

Product Name	Part #
4.0mm x 8mm*	4008 ENGAGE
4.0mm x 10mm*	4010 ENGAGE
4.0mm x 12mm*	4012 ENGAGE
4.0mm x 14mm*	4014 ENGAGE
4.0mm x 16mm*	4016 ENGAGE

5.0mm Engage™ Bone Level Implant*

Product Name	Part #
5.0mm x 8mm*	5008 ENGAGE
5.0mm x 10mm*	5010 ENGAGE
5.0mm x 12mm*	5012 ENGAGE
5.0mm x 14mm*	5014 ENGAGE
5.0mm x 16mm*	5016 ENGAGE

6.0mm Engage™ Bone Level Implant*

Product Name	Part #
6.0mm x 6mm*	6006 ENGAGE
6.0mm x 8mm*	6008 ENGAGE
6.0mm x 10mm*	6010 ENGAGE
6.0mm x 12mm*	6012 ENGAGE
6.0mm x 14mm*	6014 ENGAGE
6.0mm x 16mm*	6016 ENGAGE

***Engage™ implant includes the following:**
(1) Cover Screw & Tissue Former (comes with implant), (1) Analog,
(1) Impression Coping/Temporary Abutment w/Fixation Screw,
(1) Ball Screw.

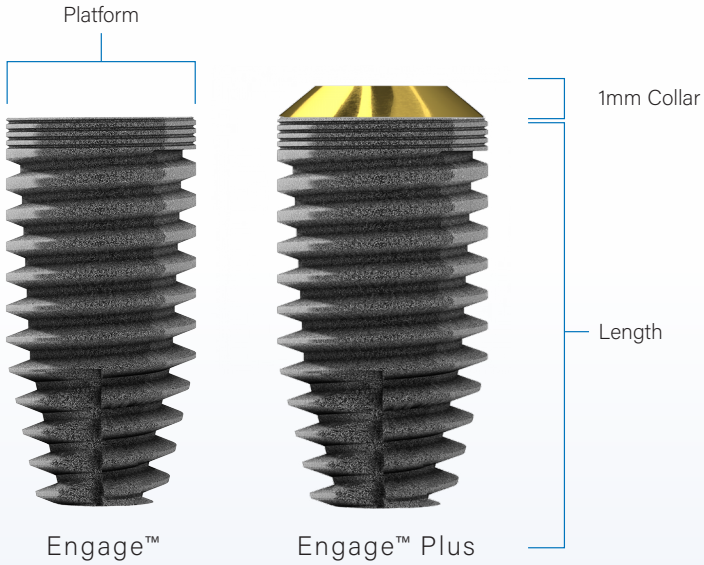

Diameter	Length	Platform
3.25mm	8, 10, 12, 14, 16mm	3.0mm
4.0mm	8, 10, 12, 14, 16mm	3.5mm
5.0mm	8, 10, 12, 14, 16mm	4.5mm
6.0mm	6, 8, 10, 12, 14, 16mm	5.7mm

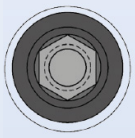

All Engage™ Implants have the Internal Hex Connection.

ORDER TODAY: 800-228-0477

WWW.OCOBIOMEDICAL.COM

SDI Prosthetics

Prosthetic Options for SDI

SDI Crown & Bridge/O-Ball Analogs

Product Name	Part #
2.2mm SDI CB/OB Analog	SDIA 2.2/2.5
2.5mm SDI CB/OB Analog	SDIA 2.2/2.5
2.9mm SDI CB/OB Analog	SDIA 2.9

SDI Acrylic Copings

Product Name	Part #
2.2mm Acrylic Coping	2.2/2.5 AC
2.5mm Acrylic Coping	2.2/2.5 AC
2.9mm Acrylic Coping	2.9/3.0/3.25 AC

SDI TRIPS (Tissue Retraction Impression Pickups)

Product Name	Part #
2.2mm TRIP	SDIC 2.2/2.5
2.5mm TRIP	SDIC 2.2/2.5
2.9mm TRIP	ISIC 2.9/3/3.25

SDI Encapsulators

Product Name	Part #
Encapsulator (002)	002 CAP
Encapsulator (002) w/O-Ring*	002 CAP W/O-RING

*Black O-Ring only

SDI O-Rings – 10 Packs

Product Name	Part #
002 Red O-Ring	002 RED
002 Black O-Ring	002 BLK
002 White O-Ring	002 WHT
002 Black O-Ring (90D)	002 BN900

SDI Retaining Rings - 2mm height

Product Name	Part #
2.2mm Retaining Ring	002 RR
2.5mm Retaining Ring	002 RR
2.9mm Retaining Ring	002 RR

3.0 Prosthetics

Prosthetic Options for 3.0

3.0 Crown & Bridge/O-Ball Analogs

Product Name	Part #
3.0mm CB/OB Analog	ISIA 3.0/3.25

3.0 Acrylic Copings

Product Name	Part #
3.0mm Acrylic Coping	2.9/3.0/3.25 AC

3.0 TRIPS (Tissue Retraction Impression Pickups)

Product Name	Part #
3.0mm TRIP	ISIC 2.9/3/3.25

3.0 Encapsulators

Product Name	Part #
Encapsulator (003)	003 CAP
Encapsulator (003) w/O-Ring*	003 CAP W/O-RING

*Black O-Ring only

3.0 Retaining Rings - 2mm height

Product Name	Part #
3.0mm Retaining Ring	003 RR

3.0 O-Rings – 10 Packs

Product Name	Part #
003 Red O-Ring	003 RED
003 Black O-Ring	003 BLK
003 White O-Ring	003 WHT
003 Black O-Ring (90D)	003 BN900

ISI Prosthetics

Prosthetic Options for ISI Implants

ISI Crown & Bridge/O-Ball Analogs

Product Name	Part #
3.25mm ISI CB/OB Analog	ISIA 3.0/3.25
4.0mm ISI CB/OB Analog	ISIA 4.0
5.0mm ISI CB/OB Analog	ISIA 5.0

ISI TRIPS (Tissue Retraction Impression Pickups)

Product Name	Part #
3.25mm TRIP	ISIC 2.9/3/3.25
4.0mm TRIP	ISIC 4.0
5.0mm TRIP	ISIC 5.0

ISI Retaining Rings - 2mm height

Product Name	Part #
3.0mm Retaining Ring	003 RR

ISI Acrylic Copings

Product Name	Part #
3.25mm ISI Acrylic Coping	2.9/3.0/3.25 AC
3.25mm ISI Acrylic Coping (7mm height)	3.25 AC (7)
4.0mm ISI Acrylic Coping	4.0 AC
4.0mm ISI Acrylic Coping (7mm height)	4.0 AC (7)

ISI Encapsulators

Product Name	Part #
Encapsulator (003)	003 CAP
Encapsulator (003) w/O-Ring*	003 CAP W/O-RING

*Black O-Ring only

ISI O-Rings – 10 Packs

Product Name	Part #
003 Red O-Ring	003 RED
003 Black O-Ring	003 BLK
003 White O-Ring	003 WHT
003 Black O-Ring (90D)	003 BN900

TSI & ERI Prosthetics

Prosthetic Options for TSI & ERI Implants

TSI/ERI Fixed Solid C & B Abutment - 3.25mm

Product Name	Part #
3.25mm (4.0mm height)	3.25CB 4 TSI
3.25mm (5.5mm height)	3.25CB 5.5 TSI
3.25mm (7mm height)	3.25CB 7 TSI

TSI/ERI Fixed Solid C & B Abutment - 4.0/5.0mm

Product Name	Part #
4.0/5.0mm (4mm height)	4CB 4 TSI
4.0/5.0mm (5.5mm height)	4CB 5.5 TSI
4.0/5.0mm (7mm height)	4CB 7 TSI

TSI/ERI Fixed Solid O-Ball Abutment - 3.25mm

Product Name	Part #
3.25mm (0mm height)	325OB0TSI
3.25mm (2mm height)	325OB2TSI
3.25mm (3mm height)	325OB3TSI
3.25mm (4mm height)	325OB4TSI

TSI/ERI Fixed Solid O-Ball Abutment - 4.0/5.0mm

Product Name	Part #
4.0/5.0mm (0mm height)	4OB0TSI
4.0/5.0mm (2mm height)	4OB2TSI
4.0/5.0mm (3mm height)	4OB3TSI
4.0/5.0mm (4mm height)	4OB4TSI

TSI/ERI Straight Pedestal Abutment

Product Name	Part #
3.25mm diameter	3100 TSI
4.0mm diameter	4100 TSI
5.0mm diameter	4100 TSI

TSI/ERI Offset Pedestal 15°Abutment

Product Name	Part #
3.25mm diameter	3200 TSI
4.0mm diameter	4200 TSI
5.0mm diameter	4200 TSI

TSI/ERI Straight Shielded Abutment

Product Name	Part #
3.25mm diameter	3150 TSI
4.0mm diameter (short)	4150 TSI S
4.0mm diameter (long)	4150 TSI L
5.0mm diameter (short)	5150 TSI S
5.0mm diameter (long)	5150 TSI L

TSI/ERI Natural Contour Abutment

Product Name	Part #
3.25mm diameter	3350 TSI-ERI
4.0mm diameter	4350 TSI-ERI
5.0mm diameter	5350 TSI-ERI

TSI/ERI Offset Shielded 15°Abutment

Product Name	Part #
3.25mm diameter (short)	3250 TSI S
3.25mm diameter (long)	3250 TSI L
4.0mm diameter (short)	4250 TSI S
4.0mm diameter (long)	4250 TSI L
5.0mm diameter (short)	5250 TSI S
5.0mm diameter (long)	5250 TSI L

TSI/ERI PEEK Temporary Abutments

Product Name	Part #
3.25mm PEEK Abutment	3.25 PA
4.0mm PEEK Abutment	4.0 PA
5.0mm PEEK Abutment	5.0 PA

TSI/ERI OCO LOK Abutment - 3.25mm

Product Name	Part #
3.25mm (0.7mm height)	1892
3.25mm (2.0mm height)	1893
3.25mm (3.0mm height)	1894
3.25mm (4.0mm height)	1895
3.25mm (5.0mm height)	1896
3.25mm (6.0mm height)	1897

TSI/ERI OCO LOK Abutment - 4.0mm/5.0mm

Product Name	Part #
4.0mm (1.0mm height)	8950
4.0mm (2.0mm height)	8951
4.0mm (3.0mm height)	8952
4.0mm (4.0mm height)	8953
4.0mm (5.0mm height)	8954
4.0mm (6.0mm height)	8955

TSI & ERI Prosthetics

Prosthetic Options for TSI & ERI

TSI/ERI Healing Abutments - 3.0mm height

Product Name	Part #
3.25mm Healing Abutment	3063 TSI HC
4.0mm Healing Abutment	4063 TSI HC

TSI/ERI Healing Abutments - 5.0mm height

Product Name	Part #
3.25mm Healing Abutment	3065 TSI HC
4.0mm Healing Abutment	4065 TSI HC

TSI/ERI UCLA (Non-Engaging Delrin - Ti Base)

Product Name	Part #
3.25mm TSI/ERI UCLA (non-engaging)	3.25 UCLA NE (TiB)
4.0mm TSI/ERI UCLA (non-engaging)	4.0 UCLA NE (TiB)
5.0mm TSI/ERI UCLA (non-engaging)	5.0 UCLA NE (TiB)

TSI/ERI Scannable Abutment

Product Name	Part #
3.25mm TSI/ERI Scannable Abutment	3.25 TiB
4.0mm TSI/ERI Scannable Abutment	4.0 TiB
5.0mm TSI/ERI Scannable Abutment	5.0 TiB

TSI/ERI Indexing Impression Coping*

Product Name	Part #
3.25mm Indexing Impression Coping	3.25 IC
4.0mm Indexing Impression Coping	4.0 IC
5.0mm Indexing Impression Coping	5.0 IC

*Indexing Impression Coping can also be used as Temporary Abutment.

TSI/ERI Healing Abutments - 2.0mm height

Product Name	Part #
3.25mm Healing Abutment	3062 TSI HC
4.0mm Healing Abutment	4062 TSI HC
5.0mm Healing Abutment	5062 TSI HC

TSI/ERI Healing Abutments - 4.0mm height

Product Name	Part #
3.25mm Healing Abutment	3064 TSI HC
4.0mm Healing Abutment	4064 TSI HC
5.0mm Healing Abutment	5064 TSI HC

TSI/ERI Flush Healing Screws

Product Name	Part #
3.25mm	3.25 FLUSH HS
4.0mm	4.0 FLUSH HS
5.0mm	5.0 FLUSH HS

TSI/ERI Implant Analog

Product Name	Part #
3.25mm Implant Analog	TSIA 3.25
4.0mm Implant Analog	TSIA 4.0
5.0mm Implant Analog	TSIA 5.0

TSI/ERI Solid C& B/O-Ball Analog (5.5mm height)

Product Name	Part #
3.25mm CB/OB Analog	ISIA 3.0/3.25
4.0mm CB/OB Analog	ISIA 4.0
5.0mm CB/OB Analog	ISIA 5.0

TSI/ERI Acrylic Copings

Product Name	Part #
3.25mm Acrylic Coping	2.9/3.0/3.25 AC
3.25mm Acrylic Coping (7mm height)	3.25 AC (7)
4.0mm Acrylic Coping	4.0 AC
4.0mm Acrylic Coping (7mm height)	4.0 AC (7)
5.0mm Acrylic Coping	5.0 AC

TSI & ERI Prosthetics

Prosthetic Options for TSI & ERI Implants

TSI/ERI TRIPS (Tissue Retraction Impression Pickups)

Product Name	Part #
3.25mm TRIP	ISIC 2.9/3/3.25
4.0mm TRIP	ISIC 4.0
5.0mm TRIP	ISIC 5.0

TSI/ERI Retaining Rings - 2mm height

Product Name	Part #
3.0mm Retaining Ring	003 RR

TSI/ERI O-Rings – 10 Packs

Product Name	Part #
003 Red O-Ring	003 RED
003 Black O-Ring	003 BLK
003 White O-Ring	003 WHT
003 Black O-Ring (90D)	003 BN900

OCO-Lok Transfer Pickup - 4 pack

Product Name	Part #
OCO-Lok Transfer Pickup - 4 pack	LOK-PU

OCO-Lok Inserts - 4 pack

Product Name	Part #
Replacement Male, Lab Cap. (Black)	LOK-090
Replacement Male, Extra Soft, 1.3 lbs, (Yellow)	LOK-088
Replacement Male, Soft, 2.6lbs, (Pink)	LOK-087
Replacement Male, Standard, 4.0 lbs, (Clear)	LOK-086
Replacement Male, Strong, 5.5 lbs, (Violet)	LOK-089
Metal Housing (2mm height)	LOK-CAP
Protective Disk	LOK-PD

TSI/ERI Offset TRIPS (Tissue Retraction Impression Pickups)

Product Name	Part #
3.25mm Offset TRIP	TSI-OS 3.25
4.0mm Offset TRIP	TSI-OS 4.0
5.0mm Offset TRIP	TSI-OS 5.0

TSI/ERI O-Ball Attachment Kits

Product Name	Part #
3.25mm O-Ball Attachment Kit	3.25 I-OB PK
4.0mm O-Ball Attachment Kit	4.0 TPK-OB
5.0mm O-Ball Attachment Kit	5.0 TPK-OB

OCO-Lok Female Analog - 4 pack

Product Name	Part #
OCO-Lok Analog	LOK-ANALOG

OCO-Lok Processing Kit - 2 pack

Product Name	Part #
OCO-Lok Processing Kit - 2 pack*	8519-2

*Includes denture cap, protective disk, black processing male & replacement males (yellow, pink, clear, purple)

Engage™ Prosthetics

Prosthetic Options for Engage™ Implants

Engage™ Straight Abutment - 3.25mm

Product Name	Part #
3.25mm (1mm collar)	32530-1SA
3.25mm (2mm collar)	32530-2SA
3.25mm (3mm collar)	32530-3SA

Engage™ Straight Abutment - 4.0mm

Product Name	Part #
4.0mm (1mm collar)	4035-1SA
4.0mm (2mm collar)	4035-2SA
4.0mm (3mm collar)	4035-3SA

Engage™ Straight Abutment - 5.0mm

Product Name	Part #
5.0mm (1mm collar)	5045-1SA
5.0mm (2mm collar)	5045-2SA
5.0mm (3mm collar)	5045-3SA

Engage™ Straight Abutment - 6.0mm

Product Name	Part #
6.0mm (1mm collar)	6057-1SA
6.0mm (2mm collar)	6057-2SA
6.0mm (3mm collar)	6057-3SA

Engage™ O-Ball Abutment - 3.25mm

Product Name	Part #
3.25mm (2mm collar)	32530-2OB
3.25mm (3mm collar)	32530-3OB
3.25mm (4mm collar)	32530-4OB

Engage™ O-Ball Abutment - 4.0mm

Product Name	Part #
4.0mm (2mm collar)	4035-2OB
4.0mm (3mm collar)	4035-3OB
4.0mm (4mm collar)	4035-4OB

Engage™ O-Ball Abutment - 5.0mm

Product Name	Part #
5.0mm (2mm collar)	5045-2OB
5.0mm (3mm collar)	5045-3OB
5.0mm (4mm collar)	5045-4OB

Engage™ O-Ball Abutment - 6.0mm

Product Name	Part #
6.0mm (1mm collar)	6057-1OB
6.0mm (2mm collar)	6057-2OB

Engage™ Crown & Bridge Abutment

Product Name	Part #
3.25mm (2mm collar)*	32530-2CB
4.0mm (2mm collar)*	4035-2CB
5.0mm (2mm collar)*	5045-2CB

*For multiple unit restorations only (not for single tooth restoration)

Engage™ Custom Angled 15°Abutment

Product Name	Part #
3.25mm	32530-CAA
4.0mm	4035-CAA
5.0mm	5045-CAA
6.0mm	6057-CAA

ORDER TODAY: 800-228-0477

WWW.OCOBIOMEDICAL.COM

Engage™ Prosthetics

Prosthetic Options for Engage™ Implants

Engage™ PEEK Temporary Straight Abutments

Product Name	Part #
3.25mm	32530 PA
4.0mm	4035 PA
5.0mm	5045 PA
6.0mm	6057 PA

Engage™ OCO-LOK Abutments (3.25mm)

Product Name	Part #
3.25mm (0mm height)	1707
3.25mm (1mm height)	1708
3.25mm (2mm height)	1709
3.25mm (3mm height)	1710
3.25mm (4mm height)	1711
3.25mm (5mm height)	1712
3.25mm (6mm height)	1713

Engage™ OCO-LOK Abutments (4.0mm)

Product Name	Part #
4.0mm (0mm height)	8661
4.0mm (1mm height)	8662
4.0mm (2.5mm height)	8663
4.0mm (3.5mm height)	8664
4.0mm (4.5mm height)	8665
4.0mm (5.5mm height)	8625
4.0mm (6.5mm height)	8626

Engage™ OCO-LOK Abutments (5.0mm)

Product Name	Part #
5.0mm (0mm height)	8671
5.0mm (1mm height)	8672
5.0mm (2.5mm height)	8673
5.0mm (3.5mm height)	8674
5.0mm (4.5mm height)	8675
5.0mm (5.5mm height)	8627
5.0mm (6.5mm height)	8628

Engage™ Healing Abutments Slim (3.0mm height)

Product Name	Part #
3.25mm Engage™ Healing Abutment (Slim)	32530-3HA (Slim)
4.0mm Engage™ Healing Abutment (Slim)	4035-3HA (Slim)
5.0mm Engage™ Healing Abutment (Slim)	5045-3HA (Slim)
6.0mm Engage™ Healing Abutment (Slim)	6057-5HA (Slim)

Engage™ Healing Abutments Slim (5.0mm height)

Product Name	Part #
3.25mm Engage™ Healing Abutment (Slim)	32530-5HA (Slim)
4.0mm Engage™ Healing Abutment (Slim)	4035-5HA (Slim)
5.0mm Engage™ Healing Abutment (Slim)	5045-5HA (Slim)
6.0mm Engage™ Healing Abutment (Slim)	6057-5HA (Slim)

Engage™ Healing Abutments (3.0mm height)

Product Name	Part #
3.25mm Engage™ Healing Abutment	32530-3HA
4.0mm Engage™ Healing Abutment	4035-3HA
5.0mm Engage™ Healing Abutment	5045-3HA
6.0mm Engage™ Healing Abutment	6057-5HA

Engage™ Healing Abutments (5.0mm height)

Product Name	Part #
3.25mm Engage™ Healing Abutment	32530-5HA
4.0mm Engage™ Healing Abutment*	4035-5HA
5.0mm Engage™ Healing Abutment	5045-5HA
6.0mm Engage™ Healing Abutment	6057-5HA

Engage™ Flush Healing Screws

Product Name	Part #
3.25mm Engage™ Flush Healing Screw	32530-HS
4.0mm Engage™ Flush Healing Screw	4035-HS
5.0mm Engage™ Flush Healing Screw	5045-HS
6.0mm Engage™ Flush Healing Screw	6057-HS

Engage™ Prosthetics

Prosthetic Options for Engage™ Implants

Engage™ 4.0mm Multi-Unit Abutment*

Product Name	Part #
Multi-Unit Abutment (1mm height)	4035-1MUA
Multi-Unit Abutment (2mm height)	4035-2MUA

*3.5mm platform

Engage™ 4.0mm Multi-Unit Angled 30°Abutment*

Product Name	Part #
30° Multi-Unit Abut. (3mm height)	4035-3MUA (Angled 30)

*3.5mm platform

Engage™ 5.0mm Multi-Unit Angled 17°Abutment*

Product Name	Part #
17° Multi-Unit Abut. (2mm height)	5045-2MUA (Angled 17)
17° Multi-Unit Abut. (3mm height)	5045-3MUA (Angled 17)
17° Multi-Unit Abut. (5mm height)	5045-5MUA (Angled 17)

*4.5mm platform

Engage™ Multi-Unit Abutment Analog

Product Name	Part #
Multi-Unit Abutment Analog	MUA ANALOG

Engage™ Multi-Unit Gold/Plastic Coping

Product Name	Part #
Multi-Unit Gold/Plastic Coping	MU COPING

Engage™ Multi-Unit Driver

Product Name	Part #
Multi-Unit Driver	MU DRIVER

Engage™ Multi-Unit Prosthetic Screw

Product Name	Part #
Multi-Unit Prosthetic Screw	MU SCREW

Engage™ Multi-Unit Scanning Abutment*

Product Name	Part #
Multi-Unit Scanning Abutment	MU SCAN

*Includes prosthetic screw

Engage™ Multi-Unit Impression Coping (Closed Tray)

Product Name	Part #
Multi-Unit Impression Coping (C)	MU-IC (CLOSED TRAY)

Engage™ 4.0mm Multi-Unit Angled 17°Abutment*

Product Name	Part #
17° Multi-Unit Abut. (2mm height)	4035-2MUA (Angled 17)
17° Multi-Unit Abut. (3mm height)	4035-3MUA (Angled 17)

*3.5mm platform

Engage™ 5.0mm Multi-Unit Abutment*

Product Name	Part #
Multi-Unit Abutment (1mm height)	5045-1MUA
Multi-Unit Abutment (2mm height)	5045-2MUA
Multi-Unit Abutment (3mm height)	5045-3MUA
Multi-Unit Abutment (5mm height)	5045-5MUA

*4.5mm platform

Engage™ 5.0mm Multi-Unit Angled 30°Abutment*

Product Name	Part #
30° Multi-Unit Abut. (3mm height)	5045-3MUA (Angled 30)
30° Multi-Unit Abut. (5mm height)	5045-5MUA (Angled 30)

*4.5mm platform

Engage™ Multi-Unit Gold Bar Coping

Product Name	Part #
Multi-Unit Gold Bar Coping	MU BAR COPING

Engage™ Multi-Unit Inclusive Guide Pin

Product Name	Part #
Multi-Unit Inclusive Guide Pin	MU GUIDE PIN

Engage™ Multi-Unit Temporary Healing Cap

Product Name	Part #
Multi-Unit Temporary Healing	MU HEALING CAP

Engage™ Multi-Unit Titanium Temporary Abutment*

Product Name	Part #
Multi-Unit Temporary Healing	MU TEMP

*Includes prosthetic screw

Engage™ Multi-Unit Impression Coping (Open Tray)

Product Name	Part #
Multi-Unit Impression Coping (O)	MU-IC (OPEN TRAY)

ORDER TODAY: 800-228-0477

WWW.OCOBIOMEDICAL.COM

Engage™ Prosthetics

Prosthetic Options for Engage™ Implants

Engage™ UCLA (Non-Engaging Delrin - Ti Base)*

Product Name	Part #
3.25mm Engage™ UCLA (non-engaging)	32530 UCLA NE (TiB)
4.0mm Engage™ UCLA (non-engaging)	4035 UCLA NE (TiB)
5.0mm Engage™ UCLA (non-engaging)	5045 UCLA NE (TiB)
6.0mm Engage™ UCLA (non-engaging)	6057 UCLA NE (TiB)
7.0mm Engage™ UCLA (non-engaging)	6057 UCLA NE (TiB)
8.0mm Engage™ UCLA (non-engaging)	6057 UCLA NE (TiB)

*Also available with a Gold Base. Please call (800) 228-0477 for additional information.

Engage™ UCLA (Engaging Delrin - Ti Base)*

Product Name	Part #
3.25mm Engage™ UCLA (engaging)	32530 UCLA E (TiB)
4.0mm Engage™ UCLA (engaging)	4035 UCLA E (TiB)
5.0mm Engage™ UCLA (engaging)	5045 UCLA E (TiB)
6.0mm Engage™ UCLA (engaging)	6057 UCLA E (TiB)
7.0mm Engage™ UCLA (engaging)	6057 UCLA E (TiB)
8.0mm Engage™ UCLA (engaging)	6057 UCLA E (TiB)

*Also available with a Gold Base. Please call (800) 228-0477 for additional information.

Engage™ UCLA (Non-Engaging Delrin - Delrin Base)

Product Name	Part #
3.25mm Engage™ UCLA (non-engaging)	32530 UCLA NE (DEL)
4.0mm Engage™ UCLA (non-engaging)	4035 UCLA NE (DEL)
5.0mm Engage™ UCLA (non-engaging)	5045 UCLA NE (DEL)
6.0mm Engage™ UCLA (non-engaging)	6057 UCLA NE (DEL)

Engage™ UCLA (Engaging Delrin - Delrin Base)

Product Name	Part #
4.0mm Engage™ UCLA (engaging)	4035 UCLA E (DEL)
5.0mm Engage™ UCLA (engaging)	5045 UCLA E (DEL)
6.0mm Engage™ UCLA (engaging)	6057 UCLA E (DEL)

Engage™ Digital Scan Body*

Product Name	Part #
3.25mm Engage™ Scan Body	32530 SB
4.0mm Engage™ Scan Body*	4035 SB
5.0mm Engage™ Scan Body	5045 SB
6.0mm Engage™ Scan Body	6057 SB

*Compatible with the Engage™ Plus 4.0, 5.0, and 6.0mm

ENGAGE™ TIBASE (SHORT)

Product Name	Part #
3.25mm	4035 TiBase
4.0mm	4035 TiBase
5.0mm	4035 TiBase

Engage™ Scannable Abutment

Product Name	Part #
3.25mm Engage™ Scannable Abutment	32530-TiB
4.0mm Engage™ Scannable Abutment	4035-TiB
5.0mm Engage™ Scannable Abutment	5045-TiB
6.0mm Engage™ Scannable Abutment	6057-TiB

Engage™ Digital Analog

Product Name	Part #
3.25mm Engage™ Analog	32530DA
4.0mm Engage™ Analog	4035DA
5.0mm Engage™ Analog	5045DA
6.0mm Engage™ Analog	6057DA

Engage™ Impression Coping*

Product Name	Part #
3.25mm Engage™ Impression Coping	32530 IC/TA
4.0mm Engage™ Impression Coping	4035 IC/TA
5.0mm Engage™ Impression Coping	5045 IC/TA
6.0mm Engage™ Impression Coping	6057 IC/TA

Engage™ Analog

Product Name	Part #
3.25mm Engage™ Analog	32530A
4.0mm Engage™ Analog	4035A
5.0mm Engage™ Analog	5045A
6.0mm Engage™ Analog	6057A

Engage™ Retaining Rings - 2mm height

Product Name	Part #
3.0mm Retaining Ring	003 RR

Engage™ Prosthetics

Prosthetic Options for Engage™ Implants

MILLING BLANK

Product Name	Part #
3.25mm Milling Blank (3.0mm Platform)	32530 MB
4.0mm Milling Blank (3.5mm Platform)*	4035 MB
5.0mm Milling Blank (4.5mm Platform)*	5045 MB
6.0mm Milling Blank (5.7mm Platform)	6057 MB

OCO-Lok Female Analog - 4 pack

Product Name	Part #
OCO-Lok Analog	LOK-ANALOG

OCO-Lok Impression Coping - 4 pack

Product Name	Part #
OCO-Lok Transfer Pickup - 4 pack	LOK-PU

OCO-Lok Processing Kit - 2 pack

Product Name	Part #
OCO-Lok Processing Kit - 2 pack*	8519-2

*Includes denture cap, protective disk, black processing male & replacement males (yellow, pink, clear, purple)

OCO-Lok Inserts - 4 pack

Product Name	Part #
Replacement Male, Lab Cap. (Black)	LOK-090
Replacement Male, Extra Soft, 1.3 lbs, (Yellow)	LOK-088
Replacement Male, Soft, 2.6lbs, (Pink)	LOK-087
Replacement Male, Standard, 4.0 lbs, (Clear)	LOK-086
Replacement Male, Strong, 5.5 lbs, (Violet)	LOK-089
Metal Housing (2mm height)	LOK-CAP
Protective Disk	LOK-PD

Instrumentation

Pilot Drills

Product Name	Part #
1.5mm Pilot Drill*	0150
1.8mm Pilot Drill	0180
2.0 Pilot Drill 8mm Length	0200-8
2.0 Pilot Drill 10mm Length	0200-10
2.0 Pilot Drill 12mm Length	0200-12
2.0 Pilot Drill 14mm Length	0200-14
2.0 Pilot Drill 16mm Length	0200-16

Use the 1.5mm Pilot Drill for the 2.2mm SDI

Drill Extension

Product Name	Part #
Drill Extension	0010

#8 Marking Burs

Product Name	Part #
#8 High Speed Marking Bur	#8 HS
#8 Latch Marking Bur	#8 LT

Adjustable Depth Gauge

Product Name	Part #
Adjustable Depth Gauge	ADJ. DEPTH GAUGE

3.25mm Tissue Punch

Product Name	Part #
3.25mm Tissue Punch	0062

4.0mm Tissue Punch

Product Name	Part #
4.0mm Tissue Punch	0063

6.0mm Tissue Punch

Product Name	Part #
6.0mm Tissue Punch	0060

2.8mm Osteotomy Former/Final Drill*

Product Name	Part #
2.8mm Osteotomy Former	0280T

*2.8mm diameter used for 3.25mm ISI/TSI/ERI/Engage™ - Maxillary drill

3.5mm Osteotomy Former/Final Drill*

Product Name	Part #
3.5mm Osteotomy Former	0350T

*3.5mm diameter used for 4.0mm ISI/TSI/ERI/Engage™ - Maxillary drill

Drill Stops for Pilot Drills

Product Name	Part #
6mm Drill Stop	DS0180-06
8mm Drill Stop	DS0180-08
10mm Drill Stop	DS0180-10
12mm Drill Stop	DS0180-12
14mm Drill Stop	DS0180-14
Drill Stop Kit (all 5 drill stops)	PILOT DS KIT

Paralleling Pins

Product Name	Part #
3.25mm Paralleling Pin	ISI-P 3.25
4.0mm Paralleling Pin	ISI-P 4.0
5.0mm Paralleling Pin	ISI-P 5.0
Engage	ENG-PP

Profiling Bur for 3.0/ISI/TSI/ERI

Product Name	Part #
3.0/3.25mm Profiling Bur	0098
4.0mm Profiling Bur	0099
5.0mm Profiling Bur	0100

5.0mm Tissue Punch

Product Name	Part #
5.0mm Tissue Punch	0065

2.4mm Osteotomy Former/Final Drill*

Product Name	Part #
2.4mm Osteotomy Former	0240TN

2.4mm diameter used for 3.0(mm) implants

3.0mm Osteotomy Former/Final Drill*

Product Name	Part #
3.0mm Osteotomy Former	0300TN

3.0mm diameter used for 3.25mm ISI/TSI/ERI/Engage™ - Mandibular drill

3.7mm Osteotomy Former/Final Drill*

Product Name	Part #
3.7mm Osteotomy Former	0370TN

3.7mm diameter used for 4.0mm ISI/TSI/ERI/Engage™ - Mandibular drill

Instrumentation

4.5mm Osteotomy Former/Final Drill*

Product Name	Part #
4.5mm Osteotomy Former	0450T

**4.5mm diameter used for 5.0mm ISI/TSI/ERI/Engage™ - Maxillary drill*

5.6mm Osteotomy Former/Final Drill*

Product Name	Part #
5.6mm Osteotomy Former	0560T

**5.6mm diameter used for 6.0mm Engage™ & Macro™ implants*

2.2/2.5mm SDI Driver*

Product Name	Part #
2.2/2.5mm SDI Driver (long)	MD-L
2.2/2.5mm SDI Driver (short)	MD-S

**Places 2.2/2.5mm SDI implant both C & B and O-Ball*

4.0/5.0mm ISI O-Ball Driver/Extension*

Product Name	Part #
ISI O-Ball Driver/Extension	0091

**Places 4.0/5.0mm ISI O-Ball implants & can also used as an extension for drivers*

4.0/5.0mm Crown & Bridge Driver*

Product Name	Part #
4.0/5.0mm C & B Driver (long)	0075N
4.0/5.0mm C & B Driver (short)	0075NS

**Places 4.0/5.0mm ISI C & B implants as well as 4.0/5.0mm C & B abutments for TSI/ERI*

Handpiece Driver/Adapter

Product Name	Part #
Handpiece Driver/Adapter	0097

Crestal Former Drill

Product Name	Part #
3.25mm Crestal Former Drill	32530CF
4.0mm Crestal Former Drill	4035CF
5.0mm Countersink Drill	5045CF
6.0mm Countersink Drill	6057CF

4.7mm Osteotomy Former/Final Drill*

Product Name	Part #
4.7mm Osteotomy Former	0470T

**4.7mm diameter used for 5.0mm ISI/TSI/ERI/Engage™ - Mandibular drill*

Countersink Drills*

Product Name	Part #
3.25mm Countersink Drill	3.25 CS
4.0mm Countersink Drill	4.0 CS
5.0mm Countersink Drill	5.0 CS

**For use with OCO Biomedical tissue level implants (ISI/TSI/ERI)*

2.9/3.0/3.25mm O-Ball Driver*

Product Name	Part #
2.9/3.0/3.25mm O-Ball Driver (long)	0076
2.9/3.0/3.25mm O-Ball Driver (short)	0076S

**Places 2.9 SDI, 3.0mm, 3.25mm ISI O-Ball implants as well as 3.25mm O-Ball Abutments for 3.25/4.0mm TSI/ERI*

2.9/3.0/3.25mm Crown & Bridge Driver*

Product Name	Part #
2.9/3.0/3.25mm C&B Driver (long)	0083N
2.9/3.0/3.25mm C&B Driver (short)	0083NS

**Places 2.9 SDI, 3.0mm, 3.25mm ISI C & B implants as well as 3.25mm C & B abutments for TSI/ERI.*

.050mm Hex Driver*

Product Name	Part #
.050mm Hex Driver (long)	.050 L
.050mm Hex Driver (short)	.050 S

**Places healing abutments, locking screws and cover screws*

ORDER TODAY: 800-228-0477

WWW.OCOBIOMEDICAL.COM

Instrumentation

Osteotomy Former Drill Stops

Product Name	Part #
8mm Length (for 2.4, 2.8, 3.0mm*)	DS 2.4/2.8/3.0-08
10mm Length	DS 2.4/2.8/3.0-10
12mm Length	DS 2.4/2.8/3.0-12
14mm Length	DS 2.4/2.8/3.0-14
16mm Length	DS 2.4/2.8/3.0-16
8mm Length (for 3.5, 3.7mm*)	DS 3.5/3.7-08
10mm Length	DS 3.5/3.7-10
12mm Length	DS 3.5/3.7-12
14mm Length	DS 3.5/3.7-14
16mm Length	DS 3.5/3.7-16
8mm Length (for 4.5, 4.7mm*)	DS 4.5/4.7-08
10mm Length	DS 4.5/4.7-10
12mm Length	DS 4.5/4.7-12
14mm Length	DS 4.5/4.7-14
16mm Length	DS 4.5/4.7-16
6mm Length (for 5.6mm*)	DS 5.6-06
8mm Length	DS 5.6-08
10mm Length	DS 5.6-10

*Osteotomy Former diameters

Ratchet Wrench

Product Name	Part #
Ratchet Wrench	RW

Thumb Knob Wrench

Product Name	Part #
Thumb Knob Wrench	TK

Surgical Driver

Product Name	Part #
Surgical Driver	SD

OCO-Lok Insertion Tool

Product Name	Part #
OCO-Lok Insertion Tool	LOK-TOOL

Internal Hex Driver (TSI/ERI/Engage™)

Product Name	Part #
3.25mm Internal Hex Driver (short)	0017
3.25mm Internal Hex Driver (long)	0018
4/5.0mm Internal Hex Driver (short)	0016
4/5.0mm Internal Hex Driver (long)	0015
6.0mm Internal Hex Driver (short)*	0020
6.0mm Internal Hex Driver (long)*	0019

Ridge Mapping Caliper

Product Name	Part #
Ridge Mapping Caliper	RMC

Torque Wrench (30-90 Ncm)

Product Name	Part #
Torque Wrench (30-90 Ncm)	6101

Adjustable Torque Wrench (30-90 Ncm)

Product Name	Part #
Adjustable Torque Wrench	ATW

Thumb Knob Wrench (for Torque Wrench)

Product Name	Part #
Thumb Knob Wrench (for Torque Wrench)	TK (6101)

Abutment Prepping Tool

Product Name	Part #
Abutment Prepping Tool	ABUTMENT TOOL

Instrumentation

Concave Tip Offset Ostteotomes

Product Name	Part #
2.65 Concave Tip Offset Osteotome	OST-OS-C 2.65
3.4 Concave Tip Offset Osteotome	OST-OS-C 3.40
4.4 Concave Tip Offset Osteotome	OST-OS-C 4.40
OST-OS-C Kit (all 3 w/case)	OST-OS-C Kit

Offset Osteotomes

Product Name	Part #
1.8mm Offset Osteotome	OST-OS 1.8
2.65mm Offset Osteotome	OST-OS 2.65
3.4mm Offset Osteotome	OST-OS 3.4
4.4mm Offset Osteotome	OST-OS 4.4
OST-OS Kit (all 4 w/case)	OST-OS Kit

Instrumentation

4.5mm Osteotomy Former/Final Drill*

Product Name	Part #
4.5mm Osteotomy Former	0450T

**4.5mm diameter used for 5.0mm ISI/TSI/ERI/Engage™ - Maxillary drill*

5.6mm Osteotomy Former/Final Drill*

Product Name	Part #
5.6mm Osteotomy Former	0560T

**5.6mm diameter used for 6.0mm Engage™*

2.2/2.5mm SDI Driver*

Product Name	Part #
2.2/2.5mm SDI Driver (long)	MD-L
2.2/2.5mm SDI Driver (short)	MD-S

**Places 2.2/2.5mm SDI implant both C & B and O-Ball*

4.0/5.0mm ISI O-Ball Driver/Extension*

Product Name	Part #
ISI O-Ball Driver/Extension	0091

**Places 4.0/5.0mm ISI O-Ball implants & can also used as an extension for drivers*

4.0/5.0mm Crown & Bridge Driver*

Product Name	Part #
4.0/5.0mm C & B Driver (long)	0075N
4.0/5.0mm C & B Driver (short)	0075NS

**Places 4.0/5.0mm ISI C & B implants as well as 4.0/5.0mm C & B abutments for TSI/ERI*

Handpiece Driver/Adapter

Product Name	Part #
Handpiece Driver/Adapter	0097

4.7mm Osteotomy Former/Final Drill*

Product Name	Part #
4.7mm Osteotomy Former	0470T

**4.7mm diameter used for 5.0mm ISI/TSI/ERI/Engage™ - Mandibular drill*

Countersink Drills*

Product Name	Part #
3.25mm Countersink Drill	3.25 CS
4.0mm Countersink Drill	4.0 CS
5.0mm Countersink Drill	5.0 CS

**For use with OCO Biomedical tissue level implants (ISI/TSI/ERI)*

2.9/3.0/3.25mm O-Ball Driver*

Product Name	Part #
2.9/3.0/3.25mm O-Ball Driver (long)	0076

**Places 2.9 SDI, 3.0mm, 3.25mm ISI O-Ball implants as well as 3.25mm O-Ball Abutments for 3.25/4.0mm TSI/ERI*

2.9/3.0/3.25mm Crown & Bridge Driver*

Product Name	Part #
2.9/3.0/3.25mm C&B Driver (long)	0083N
2.9/3.0/3.25mm C&B Driver (short)	0083NS

**Places 2.9 SDI, 3.0mm, 3.25mm ISI C & B implants as well as 3.25mm C & B abutments for TSI/ERI.*

.050mm Hex Driver*

Product Name	Part #
.050mm Hex Driver (long)	.050 L
.050mm Hex Driver (short)	.050 S

**Places healing abutments, locking screws and cover screws*

Regenerative Products

Allograft

Mineralized Cortical/ Cancellous Blend (250-1000)

Product Name	Part #
0.5cc Mineralized Cortico-Cancellous Blend	MCC05
1.0cc Mineralized Cortico-Cancellous Blend	MCC10
2.0cc Mineralized Cortico-Cancellous Blend	MCC20
2.5cc Mineralized Cortico-Cancellous Blend	MCC25
5.0cc Mineralized Cortico-Cancellous Blend	MCC50

Allograft DBM Putty

Product Name	Part #
Allograft DBM Putty .7cc Syringe	DBM07
Allograft DBM Putty 1.0cc Syringe	DBM10
Allograft DBM Putty 2.5cc Syringe	DBM25
Allograft DBM Putty 5.0cc Syringe	DBM50

Allograft DBM Crunch Putty

Product Name	Part #
Allograft DBM Crunch Putty .7cc Syringe	DBM07C
Allograft DBM Crunch Putty 1.0cc Syringe	DBM10C
Allograft DBM Crunch Putty 2.5cc Syringe	DBM25C
Allograft DBM Crunch Putty 5.0cc Syringe	DBM50C

Alloplast

OSTEOGEN® GRAFTING PLUGS

Product Name	Part #
Bone Grafting Plug 6mm X 25 cm (5-Pack)	OP 625
Bone Grafting Plug 10mm X 20 cm (5-Pack)	OP 1020
Bone Grafting Plug 6mm X 25 cm (10-Pack)	OP 625-10
Bone Grafting Plug 10mm X 20 cm (10-pack)	OP 1020-10

Collagen Products

Helliplug: Collagen Plug

Product Name	Part #
Collagen Plug 3/8 X 3/4 (10PK)	62-202

Helimend Resorable Collagen Membrane

Product Name	Part #
Resorbable Collagen Membrane 15 X 20	62-203
Resorbable Collagen Membrane 20 X 30	62-204
Resorbable Collagen Membrane 30 X 40	62-205

Amnion Chorion Membrane

BIOXCLUDE™ Amnion Chorion Membrane

Product Name	Part #
Membrane 8mm x 8mm	GB0808
Membrane 12mm x 12mm	GB1212
Membrane 12mm x 12mm	GB1020

Photo by Michael D'Hondt , DDS

*Shipping Costs Vary For Regenerative Products

Restorative Products

AIT Kit (002)*

Product Name	Part #
AIT Kit (002)*	002 O-RING KIT

*Kit contains: (1) Straight Post (002 POST), (1) Encapsulator (002 CAP), (2) Red O-Rings (002 RED), (1) Black O-Ring (002 BLK)

AIT Kit (003)*

Product Name	Part #
AIT Kit (003)*	003 O-RING KIT

*Kit contains: (1) Straight Post (003 POST), (1) Encapsulator (003 CAP), (2) Red O-Rings (003 RED), (1) Black O-Ring (003 BLK)

Encapsulators

Product Name	Part #
Encapsulator (002)	002 CAP
Encapsulator (002) w/O-Ring*	002 CAP W/O-RING
Encapsulator (003)	003 CAP
Encapsulator (003) w/O-Ring*	003 CAP W/O-RING
Encapsulator (005)	005 CAP

*Black O-Ring only

Retaining Rings - 2mm height

Product Name	Part #
2.0mm Retaining Ring	002 RR
3.0mm Retaining Ring	003 RR

O-Rings – 10 Packs

Product Name	Part #
002 Red O-Ring	002 RED
002 Black O-Ring	002 BLK
002 White O-Ring	002 WHT
002 Black O-Ring (90D)	002 BN900
003 Red O-Ring	003 RED
003 Black O-Ring	003 BLK
003 White O-Ring	003 WHT
003 Black O-Ring (90D)	003 BN900

Straight Posts

Product Name	Part #
002 Straight Post	002 POST
003 Straight Post	003 POST
005 Straight Post	005 POST

Distal Extension Posts

Product Name	Part #
002 Distal Extension Post	002 DX POST
003 Distal Extension Post	003 DX POST

Patient Education Tools

Dental Models, Atrophic Education Boards & Brochures

4 on the Floor O-Ball Patient Education Model*

4 on the Floor O-Ball Denture Stabilization Model shown

Product Name	Part #
4 on the Floor Model	4 ON THE FLOOR

**Model comes with Encapsulators and O-Rings. Custom models available on request.*

Custom Education Model*

Custom Education Model shown

Product Name	Part #
Custom Education Model	CEM

**Model comes with ISI & 3.0 implants. Custom models available on request.*

Atrophic Education Boards (Mandible & Maxilla)

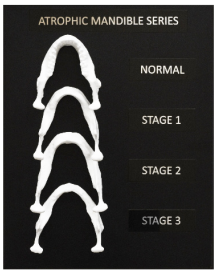

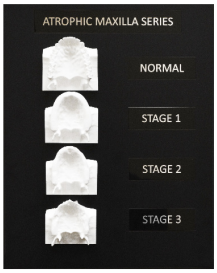

Atrophic Education Boards

Product Name	Part #
Atrophic Mandible Board	MANDIBLES BOARD
Atrophic Maxilla Board	MAXILLAS BOARD

Implant Unit

Aseptico Product Packages

Aseptico Implant Motor & Surgical Motor Packages (AEU-1000)

Product Name
AEU-1000-OCO

Aseptico Implant Motor & Surgical Motor Packages (AEU-6000)

The AEU-6000 is quickly becoming the best-selling implant motor on the market due to its reliability and affordability.

This versatile implant and surgical motor performs standard or mini implants, third molar extractions and other surgical applications, and even endodontics with auto-stop-reverse.

Product Name
AEU-6000/Mont Blanc Package (Non-fiber optic)
AEU-6000/Impulsion Package

Aseptico Implant Motor & Surgical Motor Packages (AEU-7000)

With more power, features, and versatility than competing systems, the AEU-7000 is the most reliable, accurate, and comprehensive implant, surgical & endo motor on the market today.

Product Name
AEU-7000/Mont Blanc Package
AEU-7000/ Mont Blanc LED Package
AEU-7000/Impulsion Package

Handpieces

Aseptico Handpieces

20:1 Impulsion Dental Handpiece

Product Name	Part #
20:1 Reduction Contra Angle	AHP-85P-I

Mont Blanc 20:1 Reduction Contra Angle Handpiece

Product Name	Part #
20:1 Mont Blanc Reduction Contra Angle	AHP-85MB-X

20:1 Mont Blanc Handpiece w/Depth Gauge & Fiber Optics

Product Name	Part #
20:1 Mont Blanc w/Depth Gauge & Fiber Optics	AHP-85MBFO-CX

Straight AT1

Product Name	Part #
1:1 Straight Angled Handpiece	AT-1

Aseptico Accessory Products

General Dental Products

Autoclavable Replacement Tubing Set*

Product Name	Part #
Autoclavable Replacement Tubing Set	AE-23

**For the AEU-7000 and AEU-6000 series implant, surgery, & endo motors*

Sodium Chloride - 0.9% 1000ml Bag

Product Name	Part #
Sodium Chloride	SODIUM CHLORIDE

Powered Trolley Cart

Product Name	Part #
Powered Trolley Cart	ATC-12v2

Terms & Conditions

Shipping, Return Policy, Implant Warranty, & Contact Information

How Can I Order Your Products?

Call our customer service department at 800-228-0477 Monday - Friday 8:00am to 5:00pm Mountain Time. You can also go to www.ocobiomedical.com.

When Will My Shipment Arrive?

OCO Biomedical ships through FedEx exclusively, transit times are as follows:

Overnight: Delivery next business day by 10:30am
2nd day: Delivery in 2 business days by 4:30pm
Ground: Delivery within 4-5 business days, by the end of day.

What is Your Return Policy?

All product must be in new and saleable condition (returned in the original packaging) with the manufacturing seals intact. Original invoice number and purchase date must accompany product in order to process the return. Product returned within 30 days of purchase can be returned for refund in the form of original payment. Product returned 30-60 days after purchase can be exchanged for same product or credit on account only. Product returned 60-120 days after purchase will require a 15% restocking fee and credit on account only. Product returned 120 days-1 year after purchase will be exchanged for same product (implants only). No products can be returned after 1 year, with no exceptions. The returned product must be enclosed in safe, protective packaging such as a padded envelope or box. Please mark the outside of the package to the attention of "Returns".

Return Address: OCO Biomedical Inc.,
Attn: Returns
9550 San Mateo Blvd. NE, Suite C, Albuquerque, NM 87113

Do You Have an Implant Warranty?

OCO Biomedical Dental Implants are warranted unconditionally against defects in material and workmanship for 5 years after production. The warranty covers only the cost of the implant and does not cover professional fees or restoration components. If a defect is found, please do not use the item. Simply return the item after notifying OCO Biomedical, and a replacement item will be delivered at no additional charge. OCO Biomedical Dental Implants are conditionally warranted if failure occurs within 2 years after placement provided that: the implant was returned un-cleansed, the implant was used with an OCO Biomedical abutment, and the implant and abutment, if applicable, are returned to OCO Biomedical accompanied by a completed Implant Incident Report, including lot number, catalog number and pre/post x-rays. The implant must be returned within 30 days of removal/failure. A Implant Incident Report may also be obtained through the Quality Control Department.

Product Sterilization Disclaimer

Implants: OCO Biomedical opposes the resterilization of implants after they have been removed from the vial or placed in the jaw because of the possibility of the transference of blood borne pathogens or other contaminants.

All other surgical instrumentation: OCO Biomedical recommends using a steam sterilization unit at 121 degrees Celsius for 15 minutes with a drying time of 30 minutes.

Contact Us

Phone

Toll Free: (800) 228-0477
International: +1 (505) 293-0025
Direct: (505) 293-0025
Fax: (505) 293-0447

Address

OCO Biomedical
9550 San Mateo Blvd. NE, Suite C
Albuquerque, NM, USA 87113

Hours

8:00 am - 5:00 pm MST
Monday - Friday

www.ocobiomedical.com

© 2022 OCO Biomedical, Inc.

OCO Biomedical Inc.
9550 San Mateo Blvd. NE, Suite C
Albuquerque, NM 87113

(800) 228-0477
www.ocobiomedical.com